HERITAGE and TECHNOLOGY
MIND KNOWLEDGE EXPERIENCE
XIII International Forum Le Vie dei Mercanti
Aversa, Capri 11-12-13 June 2015

A pyramidal kitchen vault in a Gothic-Renaissance palace. Oliva, Valencia, Spain

Alba SOLER ESTRELA[1], Rafael SOLER VERDÚ[2], Manuel CABEZA GONZÁLEZ[3]
(1) Department of Industrial Systems Engineering and Design, Universitat Jaume I, Castellón, Spain. estrela@uji.es
(2) Departament of Architectural Constructions, Universidad Politécnica de Valencia, Valencia, Spain. rsoler@csa.upv.es
(3) Department of Industrial Systems Engineering and Design, Universitat Jaume I, Castellón, Spain. cabeza@uji.es

Abstract
The splendid Gothic-Renaissance palace is almost completely in ruin, except for a few remains. However, thanks to the Hispanic Society of America important graphic and photographic documentation has been preserved, making it possible to evoke its architecture. This was drawn up by Danish architect Egil Fischer and collaborators in the form of survey drawings from the 1918 deconstruction process. The plan of the main floor shows the situation of the kitchen. Moreover, one of Fischer's notebooks includes a complete sketch of this room with the plan, elevation, section, and dimensions. It shows the interesting quadrangular vault, squinches and wide pyramidal chimney, as they were in the early 20th century. This space has disappeared completely following the complete destruction of the main floor. Research based on the drawings makes it possible to virtually reconstruct the vault in its original condition, dating back to the late Gothic period. To do so, an architectural methodology is developed to further examine constructive aspects. This methodology is applied to the few similar cases which still remain as an original type which is both undervalued and under-researched.

Keywords: Pyramid vault, lantern, chimney, octagon, squinch, virtual reconstruction, architectural heritage

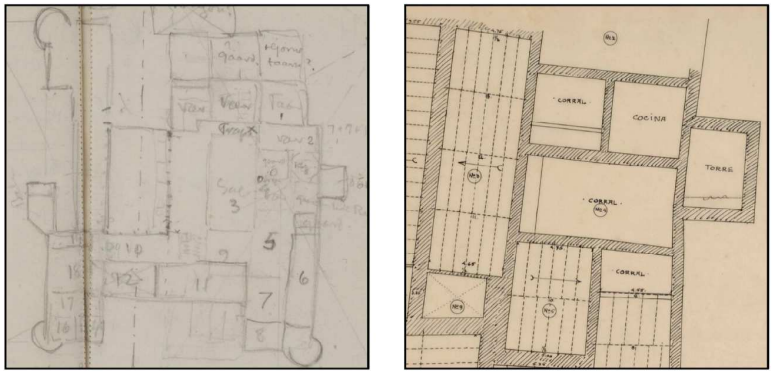

Fig. 1: Composition from the different plans in which the kitchen area appears.

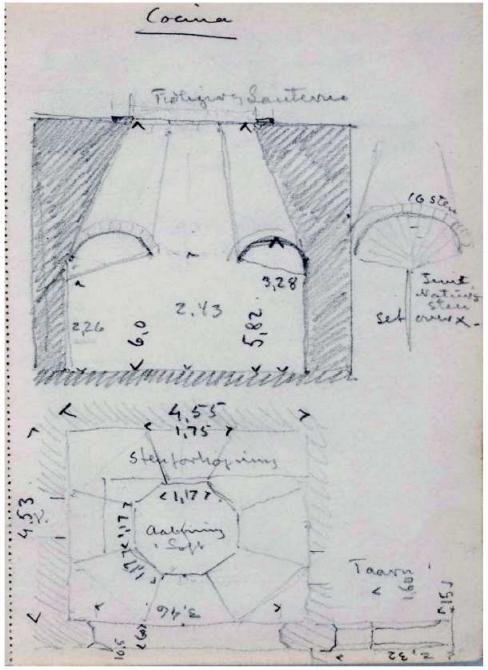

Fig. 2: Fischer's sketch in Notebook II.

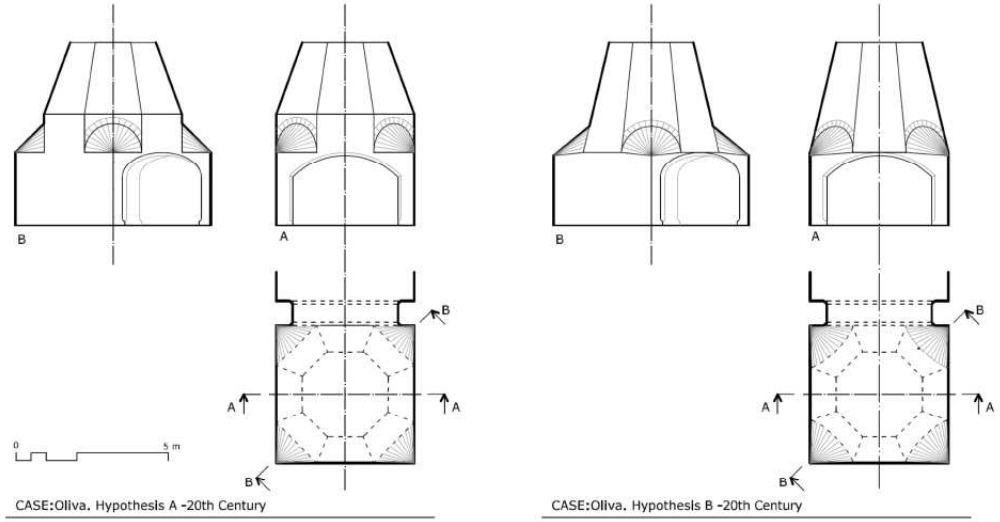

Fig. 5: Hypothetical reconstruction of the state in the early 20th century.

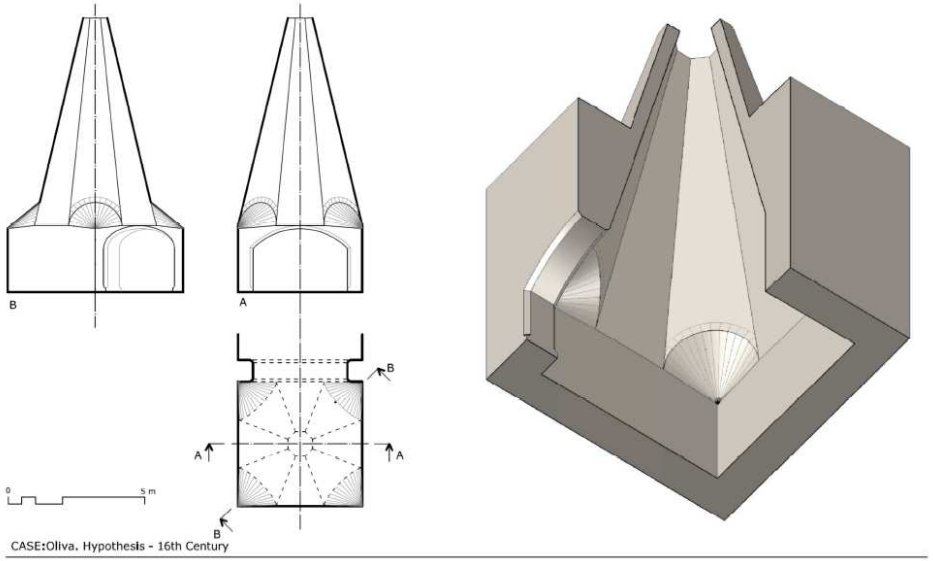

Fig. 6: Restitution to original state.

A pyramidal kitchen vault in a Gothic-Renaissance palace. Oliva, Valencia, Spain
Alba SOLER ESTRELA, Rafael SOLER VERDÚ, Manuel CABEZA GONZÁLEZ
2015. HERITAGE and TECHNOLOGY Mind Knowledge Experience Le Vie dei Mercanti. Ed. La scuola di Pitagora. Heritage and Technology Mind Knowledge Experience (XIII Forum Internationale_Le Vie dei Mercanti).